Question Paper

Exam Date & Time: 12-May-2025 (09:30 AM - 12:30 PM)

MANIPAL ACADEMY OF HIGHER EDUCATION

SECOND SEMESTER B.TECH. DEGREE EXAMINATIONS - APRIL / MAY 2025
SUBJECT: BIO 1071/BIO_1071 - BIOLOGY FOR ENGINEERS

Marks: 50 **Duration: 180 mins.**

Answer all the questions.

1A) "Carbon is often referred to as the 'backbone of life' due to its versatile chemical properties. Analyze how carbon's ability to form diverse compounds supports the existence of life. Illustrate your answer with examples from biological molecules essential for life." (3)

Course Outcome: "CO1" / Cognitive Level: "Application"

1B) Analyze the engineering resulted in alpha helical and beta sheet using hydrogen bonding. Support your answer with a suitable illustration. (3)

Course Outcome: "CO1" / Cognitive Level: "Analysis"

1C) Given below are two isomers of $C_6H_{12}O_6$. Illustrate how the polymer forms from this monomers? What makes the difference? Give example. (4)

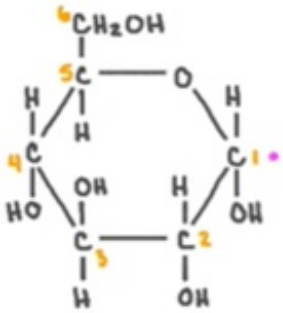

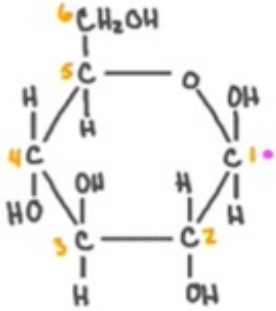

Course Outcome: "CO1" / Cognitive Level: "Understand"

2A) In a dihybrid cross between pea plants, you studied the inheritance of seed shape (round, R; wrinkled, r) and seed color (yellow, Y; green, y). He crossed plants heterozygous for both traits (RrYy) with each other. The following phenotypic ratio was obtained - He got a ratio of Wrinkled green: Round Yellow: Round green: Wrinkled yellow 1:9:3:3 (3)
a) Construct a Punnett square to represent this cross.
b) What you can predict from the results?
c) What are the possible genotypes of Wrinkled yellow?
(1 mark × 3 = 3 marks)

Course Outcome: "CO2" / Cognitive Level: "Application"

2B) Analyse the following pedigree chart: (3)

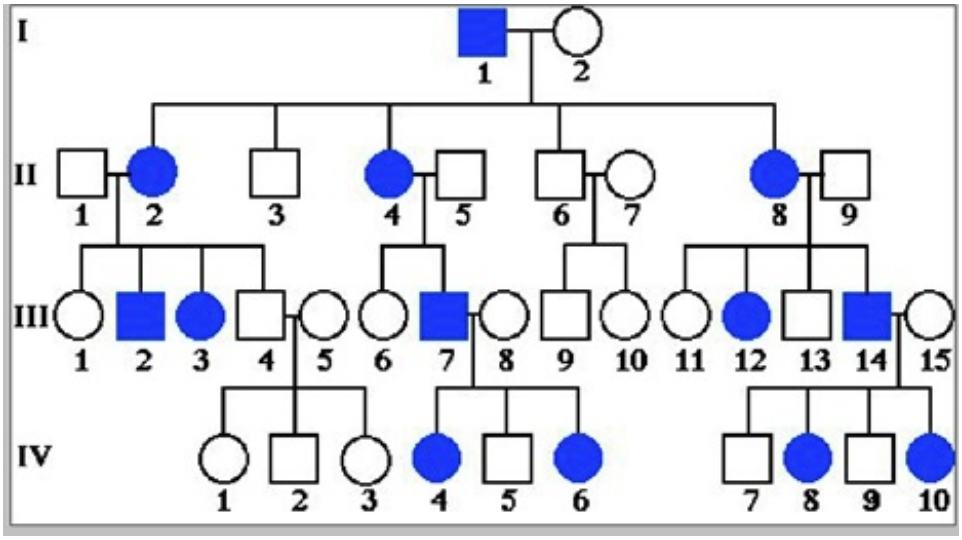

a) Predict the best possible mode of inheritance? Justify?
b) Justify how for individual III-6 remains unaffected, while III-7 remains affected.
c) Individual IV-6 marries a normal man. Calculate the probability of their first child being affected?

Course Outcome: "CO2" / Cognitive Level: "Analysis"

2C) You are doing a genetics experiment with the fruit fly. In the "P" generation, you cross two true-breeding flies. The female parent is brown and wingless and the male parent is black with normal wings. All of the flies in the F1 generation are brown and have normal wings. (4)

Indicate the alleles associated with dominant phenotypes by uppercase letters and alleles associated with recessive phenotypes by lowercase letters. Assume the genes are not found on a sex chromosome. Indicate the color alleles as "B" and "b" the wing alleles by the letters "N" and "n".
a) The genotypes of the flies in the P generation are:
b) The genotype of the flies in the F1 generation is:
c) You count 1600 offspring in the F2 generation. If the wing and the color traits were linked and no recombination occurred, you would expect to count:
d) When you count the F2 generation, you really get:
• 85 brown winged flies
• 728 black winged flies
• 712 brown wingless flies
• 75 black wingless flies
What is the genetic distance between the color and wing genes?

Course Outcome: "CO2" / Cognitive Level: "Understand"

3A) Predict how the bands will appear in density gradient centrifugation for (a) Copy the figure and mark the bands Semi conservative and (b) Copy the figure and mark the bands dispersive mode of replication. (3)

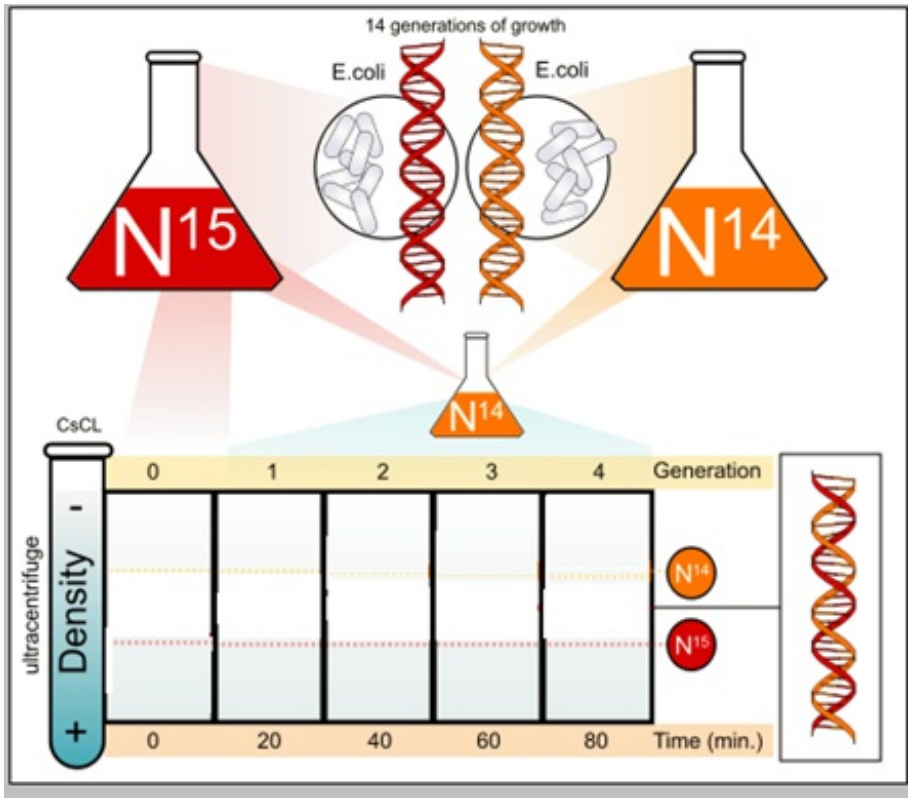

(c) If you use water instead of CsCl, how the bands will appear? Copy the figure and mark the band.

Course Outcome: "CO3" / Cognitive Level: "Application"

3B) Provide reasoning for: (HIGHLIGHT the key point) (3)

a) Nascent mRNA is always larger than the mature mRNA.

b) Protein formation happens outside the nucleus.

c) Predict the tRNA anticodon for the DNA code 5'GAC3' and the amino acid it code for.

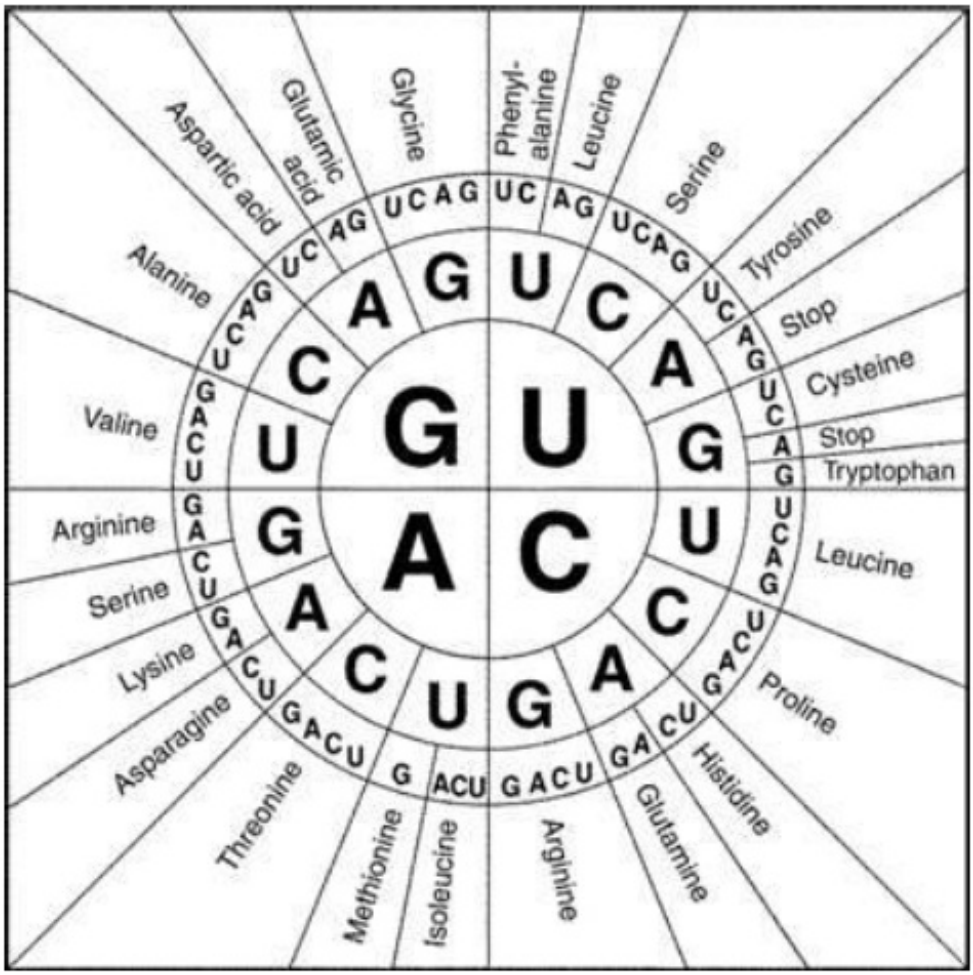

Course Outcome: "CO3" / Cognitive Level: "Analysis"

3C) i) Construct the DNA code for the protein N terminus- Cysteine-Methionine-Methionine-C terminus. (4)
ii) Construct the functional mRNA for the above protein.
(2+2 = 4 marks)

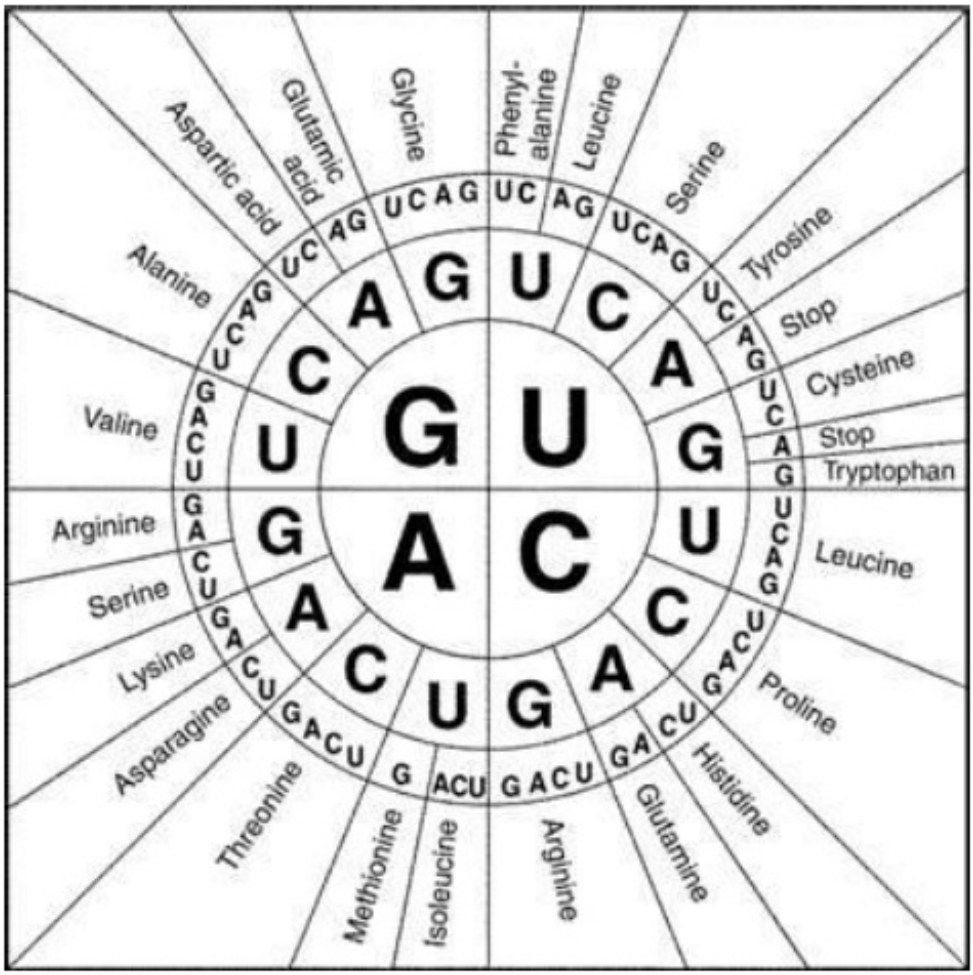

Course Outcome: "CO3" / Cognitive Level: "Evaluate"

4A) Are evolution and "survival of the fittest" the same thing? Justify. (3)

Course Outcome: "CO4" / Cognitive Level: "Analysis"

4B) Why evolutionn is significant in engineering sciences? Justify your reasoning (3)

Course Outcome: "CO4" / Cognitive Level: "Analysis"

4C) Can a change in DNA sequence results in mutation? Illustrate different types with examples (4)

Course Outcome: "CO4" / Cognitive Level: "Analysis"

5A) With a huge potential for innovation, biomimetic could evolve into a key process in businesses. The problem-driven process of biomimetic Leads to Self-sealing and self-healing. Give one example for Self-sealing and self-healing with explaination. (3)

Course Outcome: "CO4" / Cognitive Level: "Understand"

5B) Explain the biomimetic effect of the given pictures with example. (3)

i)

ii)

(1½ marks × 2 = 3 marks)

Course Outcome: "CO4"

5C) Below are the Examples of Bioinspiration organism, mention the technology that was developed; (4)

a) Spider
b) Pearl
c) Beetle
d) Humpback whale fins

Course Outcome: "CO4" / Cognitive Level: "Analysis"

-----End-----

Event Name	Subject
MIT MPL and BLR- BTech-M Sc-MCA - II-IV and VI Sem - End Semester Examination - Apr-May 2025	BIO 1071-CHM:BIOLOGY FOR ENGINEERS

#	Course Outcome	Description	Marks
1	1	CO 1	10
2	2	CO 2	10
3	3	CO 3	10
4	4	CO 4	20
		Total	**50**

* NA - CO Not Selected

Event Name	Subject
MIT MPL and BLR- BTech-M Sc-MCA - II-IV and VI Sem - End Semester Examination -	BIO 1071-CHM:BIOLOGY FOR

#	Level	No of Questions	Marks (%)
1	Remember	0	0(0%)
2	Understand	3	11(23.4%)
3	Application	3	9(19.15%)
4	Analysis	7	23(48.94%)
5	Create	1	4(8.51%)
6	Evaluate	0	0(0%)
	Total	14	47 (100%)